Chapter 7

LO System and Signal Transport

Robert Lucas

lucas@iram.fr

IRAM, 300 rue de la Piscine, F-38406 Saint Martin d'Hères, France

7.1 An Heterodyne Interferometer

7.1.1 The simple interferometer

This is composed of 2 antennas, a multiplier, an integrator (Fig. 7.1); we directly multiply the signals, and average in time. $\tau_G = 2\pi \boldsymbol{b}.\boldsymbol{s}/c$ is the geometrical delay. Provided the geometrical delay is compensated in the hardware, after filtering out the high frequency terms, the output of the correlator is the real part of the visibility:

$$r(t) = A \cos \varphi(t) \tag{7.1}$$

A complex correlator using a quadrature network can be used to measure the imaginary part; or (equivalently) one uses a spectral correlator.

7.1.2 The heterodyne interferometer

We now consider a more realistic two antenna system (Fig. 7.2), which includes two frequency conversions: e.g. one in the SIS mixer, and one to move the IF band to baseband for numerical sampling and digital correlation. This again is a simplification, but includes all the important effects. The PdB system has in fact 4 frequency conversions (see below).

Let us first consider the effect on phase of a simple frequency conversion.

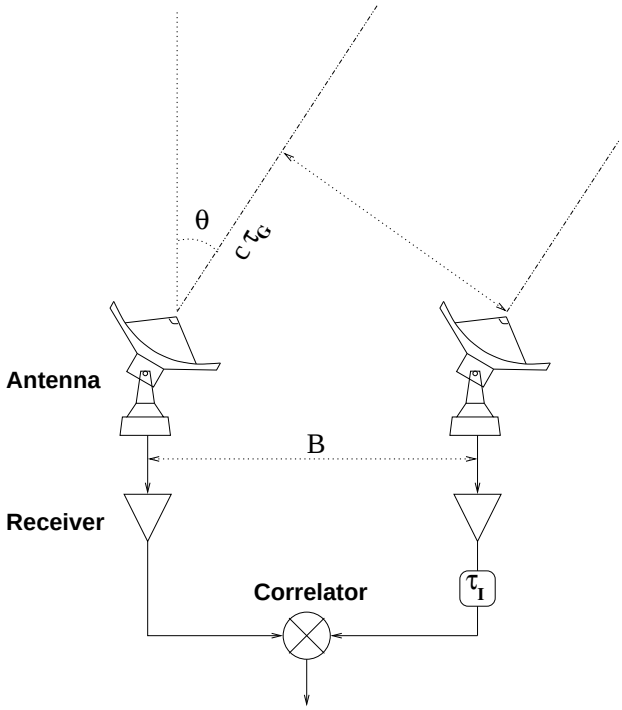

Figure 7.1: A simple, two-antenna interferometer

7.1.3 Frequency conversion

The input signal to the mixer is $U(t) = E\cos(\omega t + \phi)$, and the first LO signal (LO1) is $U_{\rm LO1}(t) = E_{\rm LO1}\cos(\omega_{\rm LO1}t + \varphi_{\rm LO1})$. Mixer output is proportional to $[U(t) + U_{\rm LO1}(t)]^2$ and we select by a filter a band $\Delta\omega$ centered on $\omega_{\rm IF}$. We note: $\omega_{\rm U} = \omega_{\rm LO1} + \omega_{\rm IF}$, and $\omega_{\rm L} = \omega_{\rm LO1} - \omega_{\rm IF}$ the angular frequencies in the upper sideband and in the lower sideband, respectively.
The IF output is

$$\begin{aligned} U_{\rm IF}(t) &\propto E_{\rm U}\cos[(\omega_{\rm U} - \omega_{\rm LO1})t + \varphi_{\rm U} - \varphi_{\rm LO1}] + E_{\rm L}\cos[(-\omega_{\rm L} + \omega_{\rm LO1})t - \varphi_{\rm L} + \varphi_{\rm LO1}] \\ U_{\rm IF}(t) &\propto E_{\rm U}\cos(\omega_{\rm IF}t + \varphi_{\rm U} - \varphi_{\rm LO1}) + E_{\rm L}\cos(\omega_{\rm IF}t - \varphi_{\rm L} + \varphi_{\rm LO1}) \end{aligned} \tag{7.2}$$

After the frequency conversion the phase is the difference of the signal phase and the LO phase, with a sign reversal if the conversion is lower sideband:

	USB	LSB
frequency:	$\omega_{\rm IF} = \omega_{\rm U} - \omega_{\rm LO1}$	$\omega_{\rm IF} = -\omega_{\rm L} + \omega_{\rm LO1}$
phase:	$\varphi_{\rm IF} = \varphi_{\rm U} - \varphi_{\rm LO1}$	$\varphi_{\rm IF} = -\varphi_{\rm L} + \varphi_{\rm LO1}$

7.1.4 Signal phase

One antenna is affected by the geometrical delay $\tau_{\rm G}$, and by the phase ($\varphi_{\rm U}$ in the upper sideband, $\varphi_{\rm L}$ in the lower sideband), which is the quantity to be measured. We apply a compensating delay $\tau_{\rm I}$ in the second IF (IF2), as well as a phase $\varphi_{\rm LO1}$ to the first LO and a phase $\varphi_{\rm LO2}$ on the second LO (LO2). We note $\Delta\tau = \tau_{\rm I} + \tau_{\rm G}$ the delay tracking error. In a 2-antenna system, we may assume that the signal path through the first antenna suffers no delay of phase offset terms. Obviously the compensating delay $\tau_{\rm I}$ in the second antenna may need to be negative, if the second antenna is closer to the source: in that case one will apply the positive delay $-\tau_{\rm I}$ on the first antenna. In a N antenna system, one will apply phase and delay commands to all the antennas; a common delay will be applied to all the antennas since no negative delay can be built with current technology.

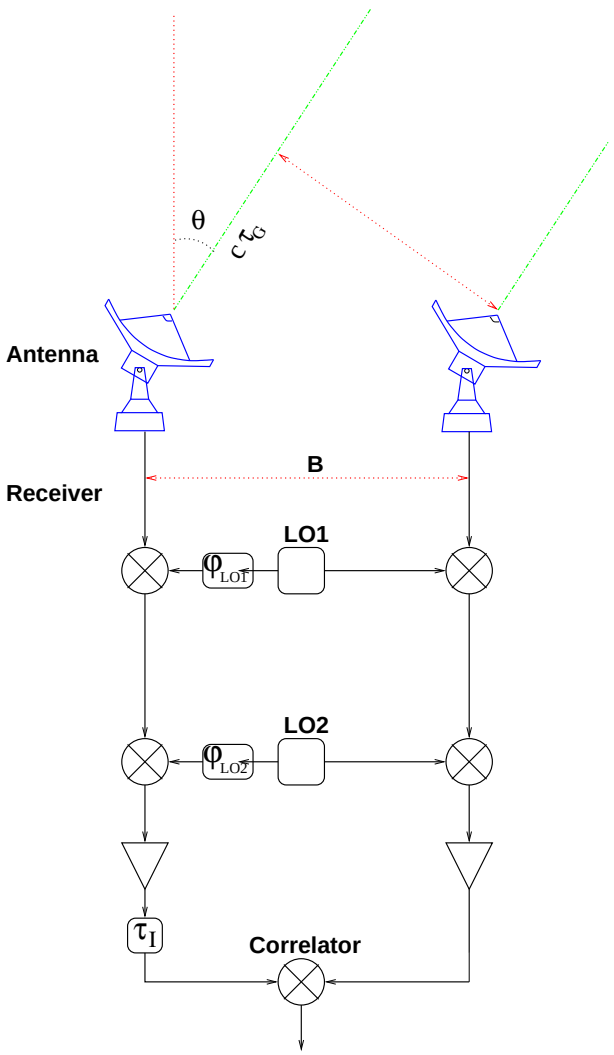

Figure 7.2: A heterodyne, two-antenna interferometer, with two frequency conversions

Let us first consider the upper sideband of the first LO (second LO conversion is assumed upper sideband for simplicity):

	USB	LSB
HF Frequency (RF)	ω_{USB}	ω_{L}
HF Phase	$\varphi_{\mathrm{U}} + \omega_{\mathrm{U}}\tau_{\mathrm{G}}$	$\varphi_{\mathrm{L}} + \omega_{\mathrm{L}}\tau_{\mathrm{G}}$
LO1 Frequency	ω_{LO1}	ω_{LO1}
LO1 Phase	φ_{LO1}	φ_{LO1}
IF1 Frequency	$\omega_{\mathrm{IF1}} = \omega_{\mathrm{U}} - \omega_{\mathrm{LO1}}$	$\omega_{\mathrm{IF1}} = \omega_{\mathrm{LO1}} - \omega_{\mathrm{L}}$
IF1 Phase	$\varphi_{\mathrm{U}} + \omega_{\mathrm{U}}\tau_{\mathrm{G}} - \varphi_{\mathrm{LO1}}$	$-\varphi_{\mathrm{L}} - \omega_{\mathrm{L}}\tau_{\mathrm{G}} + \varphi_{\mathrm{LO1}}$
LO2 Frequency	ω_{LO2}	ω_{LO2}
LO2 Phase	φ_{LO2}	φ_{LO2}
IF2 Frequency	$\omega_{\mathrm{IF2}} = \omega_{\mathrm{U}} - \omega_{\mathrm{LO1}} - \omega_{\mathrm{LO2}}$	$\omega_{\mathrm{IF2}} = \omega_{\mathrm{LO1}} - \omega_{\mathrm{L}} - \omega_{\mathrm{LO2}}$
IF2 Phase	$\varphi_{\mathrm{U}} + \omega_{\mathrm{U}}\tau_{\mathrm{G}} - \varphi_{\mathrm{LO1}} - \varphi_{\mathrm{LO2}}$	$-\varphi_{\mathrm{L}} - \omega_{\mathrm{L}}\tau_{\mathrm{G}} + \varphi_{\mathrm{LO1}} - \varphi_{\mathrm{LO2}}$
after τ_{I}	$\varphi_{\mathrm{U}} + \omega_{\mathrm{U}}\tau_{\mathrm{G}} - \varphi_{\mathrm{LO1}} - \varphi_{\mathrm{LO2}} + \omega_{\mathrm{IF2}}\tau_{\mathrm{I}}$	$-\varphi_{\mathrm{L}} - \omega_{\mathrm{L}}\tau_{\mathrm{G}} + \varphi_{\mathrm{LO1}} - \varphi_{\mathrm{LO2}} + \omega_{\mathrm{IF2}}\tau_{\mathrm{I}}$
Final	$\varphi_{\mathrm{U}} + \omega_{\mathrm{IF2}}\Delta\tau$	$-\varphi_{\mathrm{L}} + \omega_{\mathrm{IF2}}\Delta\tau$
	$-(\varphi_{\mathrm{LO1}} + \omega_{\mathrm{LO1}}\tau_{\mathrm{G}})$	$+(\varphi_{\mathrm{LO1}} + \omega_{\mathrm{LO1}}\tau_{\mathrm{G}})$
	$-(\varphi_{\mathrm{LO2}} + \omega_{\mathrm{LO2}}\tau_{\mathrm{G}})$	$-(\varphi_{\mathrm{LO2}} + \omega_{\mathrm{LO2}}\tau_{\mathrm{G}})$

To stop the fringes in both sidebands we need the following conditions:

$$\Delta\tau = \tau_{\mathrm{I}} + \tau_{\mathrm{G}} = 0 \tag{7.3}$$

$$\varphi_{\mathrm{LO1}} + \omega_{\mathrm{LO1}}\tau_{\mathrm{G}} = 0 \tag{7.4}$$

$$\varphi_{\mathrm{LO2}} + \omega_{\mathrm{LO2}}\tau_{\mathrm{G}} = 0 \tag{7.5}$$

One sees that *delay tracking* in the second IF imposes a *phase tracking* on the first and second oscillators. The delay error $\Delta\tau$ appears as a phase term proportional to frequency in the IF2 band ω_{IF2}.

The condition that e.g. $\varphi_{\mathrm{LO1}} = -\omega_{\mathrm{LO1}}\tau_{\mathrm{G}}$ means that φ_{LO1} must be commanded to vary at a rate

$$\dot{\varphi_{\mathrm{LO1}}} = -\omega_{\mathrm{LO1}}\dot{\tau_{\mathrm{G}}} \sim 2\pi\frac{b}{\lambda_1}\frac{2\pi}{86400} \tag{7.6}$$

which is about 10 turns per second for $\lambda_1 = 1$mm and $b = 1$km. The condition is much easier for the second LO. In practice the phase is commanded typically every second, as well as its rate of change during the next second (the real curve is approximated by a piecewise linear curve). Note that a linear drift with time of the phase is strictly equivalent to a small frequency offset.

7.2 Delay lines requirements

7.2.1 Single sideband processing in a finite bandwidth

Assume that the conversion loss is negligible for the lower sideband. At a given IF2 frequency ω_{IF2} the directly correlated signal is:

$$V_r = A\cos(\varphi + \omega_{\mathrm{IF2}}\Delta\tau) \tag{7.7}$$

while the sine correlator would give:

$$V_i = A\sin(\varphi + \omega_{\mathrm{IF2}}\Delta\tau) \tag{7.8}$$

$$V = V_r + iV_i = Ae^{i(\varphi+\omega_{\mathrm{IF2}}\Delta\tau)} \tag{7.9}$$

Assume we use a correlator with a finite bandwidth $\Delta\nu$. The correlator output is obtained by summing on frequency in the IF passband:

$$V = \int Ae^{i(\varphi+\omega_{\mathrm{IF2}}\Delta\tau)}B(\omega_{\mathrm{IF2}})d\omega_{\mathrm{IF2}} \tag{7.10}$$

where $B(\omega_{\rm IF2})$ is a complex passband function characteristic of the system: gain of the amplifiers and relative phase factors.

$$V = Ae^{i\varphi} \int e^{i\omega_{\rm IF2}\Delta\tau} B(\omega_{\rm IF2}) d\omega_{\rm IF2} \tag{7.11}$$

We have assumed that the source visibility is constant across the band; the source visibility, when the delay error varies, is multiplied by the Fourier transform of the complex passband.

The delay error must be kept much smaller than the inverse of the instantaneous bandwidth to limit the signal loss to a small level. The delays are usually tracked in steps, multiples of a minimum value. To limit the loss to 1%, the minimum delay step must be $\sim 0.25/\Delta\nu$ (0.5 ns for a 500 MHz bandwidth).

7.2.2 Double sideband system

In that case the signals coming from the upper and lower sidebands have similar attenuation in the RF part and similar conversion loss in the mixers. They will have similar amplitudes in the correlator output. The result for the cosine correlator is:

$$\begin{aligned} V = \quad & A_{\rm U} e^{i[\varphi_{\rm U} + \omega_{\rm IF2}\Delta\tau - (\varphi_{\rm LO1} + \omega_{\rm LO1}\tau_{\rm G}) - (\varphi_{\rm LO2} + \omega_{\rm LO2}\tau_{\rm G})]} \\ + \quad & A_{\rm L} e^{i[-\varphi_{\rm L} + \omega_{\rm IF2}\Delta\tau + (\varphi_{\rm LO1} + \omega_{\rm LO1}\tau_{\rm G}) - (\varphi_{\rm LO2} + \omega_{\rm LO2}\tau_{\rm G})]} \end{aligned} \tag{7.12}$$

Assuming the same visibility in both sidebands:

$$V = A\cos(\varphi - \varphi_{\rm LO1} - \omega_{\rm LO1}\tau_{\rm G}) e^{i(\omega_{\rm IF2}\Delta\tau - \varphi_{\rm LO2} - \omega_{\rm LO2}\tau_{\rm G})} \tag{7.13}$$

If the delays are tracked, and the LO phases rotated as above, the exponential term is 1 and only the real part of the visibility is measured. Some trick is thus needed to separate the signal from the sidebands.

7.3 sideband separation

The sideband separation by mixer rejection is difficult for low IF frequencies, and currently works only at 3mm. The image rejection varies with frequency. There are other methods that cancel the signal in the unwanted side band by a larger factor. They are based on the fact that the LO1 phase $\varphi_{\rm LO1}$ appears with a different sign on the USB and LSB signals.

7.3.1 Fringe rate method

One might choose to drop the phase rotation on the second LO and let the fringes drift at their natural fringe rates. These rates are opposed in sign for the USB and LSB, and they might be separated electronically. However the natural fringe rate sometimes goes to zero (when the angular distance between source and baseline direction is minimum or maximum), and at least in these cases the method would fail.

It would be more practical to offset the LO1 and LO2 phase rates $\dot{\varphi}_{\rm LO1}$ and $\dot{\varphi}_{\rm LO2}$ from their nominal values by the same amount $\omega_{\rm OFF}$. If the offsets have the same sign, they will compensate for the USB and offset the fringe rate by $2\omega_{\rm OFF}$ in the LSB. If $\omega_{\rm OFF}$ is large enough, the LSB signal will be cancelled. Note that offsetting $\dot{\varphi}_{\rm LO1}$ by a fixed amount is equivalent to offsetting the LO1 frequency.

This is a simple method to reject the unwanted sideband. Note that the associated noise is not rejected.

7.3.2 Phase switching method

Assume a variable phase offset ψ_1 is added to the LO1 phase command appropriate for compensating the geometrical delay variation:

$$\varphi_{\rm LO1} = -\omega_{\rm LO1}\tau_{\rm G} + \psi_1 \tag{7.14}$$

ψ_1 will be subtracted to the phase of the USB signal, and added to that of the LSB signal. If ψ_1 is switched between 0 and $\pi/2$, the relative phase of the USB and LSB will be switched between 0 and π, and the signals may be separated by synchronous demodulation:

ψ_1	Signal
0	$V_1 = A_{\rm U} e^{i\varphi_{\rm U}} + A_{\rm L} e^{-i\varphi_{\rm L}}$
$\pi/2$	$V_2 = A_{\rm U} e^{i(\varphi_{\rm U} - \pi/2)} + A_{\rm L} e^{i(-\varphi_{\rm L} + \pi/2)}$

Then one may compute the visibilities in each sideband:

$$\begin{aligned} A_{\rm U} e^{i\varphi_{\rm U}} &= (V_1 + iV_2)/2 \\ \text{and} \quad A_{\rm L} e^{-i\varphi_{\rm L}} &= (V_1 - iV_2)/2 \end{aligned} \tag{7.15}$$

We have assumed here that we have a complex correlator (sine + cosine), or equivalently a spectral correlator measuring positive and negative delays (see Chapter 6).

One may also switch the phase by π, in which case the sign of all the correlated voltages is reversed. This has the advantage of suppressing any offsets in the system. Actually both switching cycles are combined in a 4-phase cycle:

ψ_1	Signal
0	$V_1 = A_{\rm U} e^{i\varphi_{\rm U}} + A_{\rm L} e^{-i\varphi_{\rm L}}$
$\pi/2$	$V_2 = A_{\rm U} e^{i(\varphi_{\rm U} - \pi/2)} + A_{\rm L} e^{i(-\varphi_{\rm L} + \pi/2)}$
π	$V_3 = -V_1$
$3\pi/2$	$V_4 = -V_2$

$$\begin{aligned} A_{\rm U} e^{i\varphi_{\rm U}} &= (V_1 + iV_2 - V_3 - iV_4)/4 \\ \text{and} \quad A_{\rm L} e^{-i\varphi_{\rm L}} &= (V_1 - iV_2 - V_3 + iV_4)/4 \end{aligned} \tag{7.16}$$

In a N antenna system one needs to switch the relative phases of all antenna pairs. This could be done by applying the above square-wave switching on antenna 2, then on antenna 3 at twice the switching frequency, and so on. In practice the switching waveforms are orthogonal Walsh functions.

7.4 The PdB Signal and LO transport system

A block diagram of the Plateau de Bure interferometer system is shown in Fig. 7.3.

7.4.1 Signal path

The signal path is outlined in Fig. 7.3. It shows the signal and LO paths for one antenna and one receiver band. The high frequency part (receiver) was described in Chapter 5. The amplified first IF output (1275-1775 MHz) is down-converted to the $100 - 600$ MHz band and transported to the central building in a high-quality cable. Before down-conversion, the band shape is modified by a low-pass filter; since the LO2 is at a higher frequency than the IF2, the bandpass will be reversed in the conversion, and this by anticipation compensates for the frequency dependent attenuation in the cable (which is of course higher at the high-frequency end of the bandpass).

The $100-600$ MHz band arriving in the central building is directed to the correlator analog IF processor inputs (with a division by 6 since there are 6 identical correlator units) and to total power detectors which are used for the atmospheric calibration and for the radiometric phase correction.

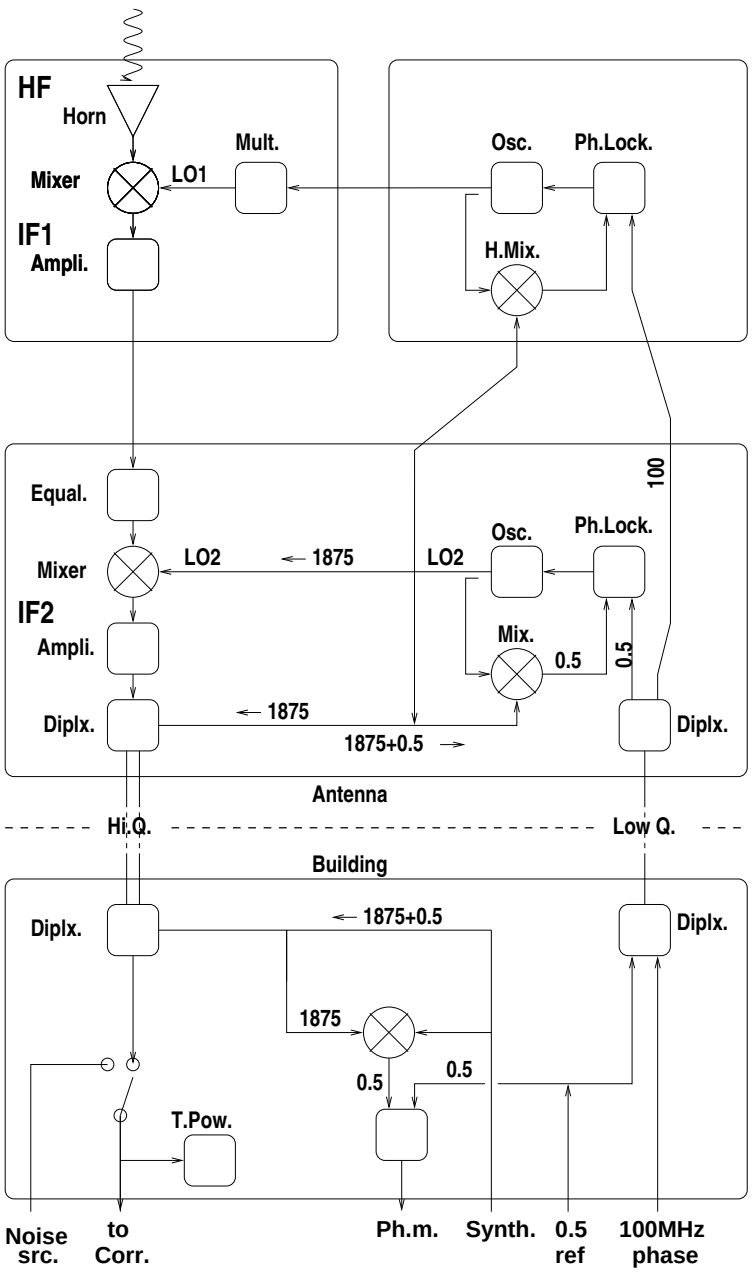

Figure 7.3: The Plateau de Bure interferometer system

7.4.2 LO generation

The first local oscillator is a Gunn oscillator (a tripler is used for the 1.3mm receiver). The Gunn is phase-locked by mixing part of its output with a harmonic of a reference signal (used also as the second LO): the harmonic mixing produces a 100MHz signal, the phase of which is compared to a reference signal at frequency ϵ_1= 100MHz, coming from the central building. That reference signal is used to carry the phase commands to be applied to the first LO: a continuously varying phase to compensate for earth motion and phase switching used to separate the side-bands and suppress offsets.

The LO1 signal at $\nu_{\rm LO1}$ may be locked either 100MHz above ("High Lock") or below ("Low Lock") the $N_{\rm H}^{\rm th}$ harmonic of the LO2 frequency $\nu_{\rm LO2}$:

$$\nu_{\rm LO1} = (N_{\rm H}\nu_{\rm LO2} \pm \epsilon_1)N_{\rm M} \tag{7.17}$$

The multiplication factor $N_{\rm M}$ is 1 for the 3mm receiver and 3 for the 1.3mm receiver.

The second local oscillator, at $\nu_{\rm LO2} = 1875 \pm 25$ MHz, is phase locked ϵ_2=0.5 MHz below the frequency sent by the synthesizer in the central building (which is under computer control and common to all antennas):

$$\nu_{\rm LO2} = \nu_{\rm SYN} - \epsilon_2 \tag{7.18}$$

The ϵ_2 reference frequency is sent to all antennas from the central building in a low quality cable, together with the ϵ_1= 100MHz reference frequency for the first LO. The $\nu_{\rm SYN}$ is sent to the antennas via the same high-Q cable that transports the IF2 signal. No phase rotation is applied on the second local oscillator. The relation between the RF signal frequencies (in the local rest frame) in the upper and lower sidebands and the signal frequency in the second IF band is thus (for high lock):

$$\nu_{\rm U} = \nu_{\rm LO1} + (\nu_{\rm LO2} - \nu_{\rm IF2}) = (N_{\rm M}N_{\rm H} + 1)\nu_{\rm LO2} + N_{\rm M}\epsilon_1 - \nu_{\rm IF2} \tag{7.19}$$

and in the lower sideband:

$$\nu_{\rm L} = \nu_{\rm LO1} - (\nu_{\rm LO2} - \nu_{\rm IF2}) = (N_{\rm M}N_{\rm H} - 1)\nu_{\rm LO2} + N_{\rm M}\epsilon_1 + \nu_{\rm IF2} \tag{7.20}$$

7.4.3 Further signal processing

In each correlator a variable section of the IF2 band is down-converted to baseband by means of two frequency changes, with a fixed third LO (LO3) and a tunable fourth LO (LO4). It is on that LO4 that the phase rotations needed to compensate for residual phase drifts due to the geometrical delay change are applied (in fact that LO4 plays the role of the second frequency conversion in the above analysis). No phase rotation is applied on the second and third local oscillators.

The phase rotation applied on the fourth LO's is:

$$\varphi_{\rm LO4} = (\omega_{\rm LO2} + \omega_{\rm LO3} - \omega_{\rm LO4})\tau_{\rm G} \tag{7.21}$$

since the second and third conversions are LSB while the fourth is USB. It is different in the different correlator units since the $\omega_{\rm LO4}$ frequencies are different.

7.4.4 Phase stability requirements

Short term phase errors in the local oscillators (jitter) will cause a decorrelation of the signal and reduce the visibility amplitude by a factor

$$\eta_{12} = e^{-({\sigma_1}^2+{\sigma_2}^2)/2} = \sqrt{e^{-{\sigma_1}^2}e^{-{\sigma_2}^2}} = \sqrt{\eta_1\eta_2} \tag{7.22}$$

where σ_1 is the rms phase fluctuation of the LO in one of the antennas (σ_2 in the other). $\eta_1 = e^{-{\sigma_1}^2}$ is the decorrelation factor for one antenna; typical requirements on σ_1 are:

η_1	0.99	0.98	0.95	0.90
σ_1 (degrees)	5.75	8.1	13.0	18.5

The phase stability required on the LO2 is $\sigma_1/(N_{\rm M}N_{\rm H}) \sim 0.1°$ for a 0.95 efficiency at 1.3mm: very stable oscillators are needed.

7.4.5 Cable electrical length control

The ϵ_2 reference frequency is also used for a continuous control of the electrical length of the High-Q cables transporting the IF2 signal from the antennas to the correlator room in the central building. A variation ΔL in the electrical length of the High-Q cable will affect the signal phase by $360\Delta L/\lambda_{\mathrm{IF2}}$; for a length of 500m and a temperature coefficient of 10^{-5} we have a variation in length of 5mm or 17ps, which translates into a phase shift of 4 degrees at the high end of the passband: this is a very small effect.

The same length variation induces a phase shift of $360 \times 0.017 \times 1.875 = 11.5$ degrees at the LO2 frequency. This signal being multiplied by $(N_{\mathrm{H}} + 1)N_{\mathrm{M}} \sim \nu_{\mathrm{U}}/\nu_{\mathrm{LO2}} \sim 120$ for the 1.3mm receiver, we have a totally unacceptable shift of about 4 turns. The cables are buried in the ground for most of their length; however they also run up the antennas and suffer from varying torsions when the sources are tracked, and in particular when the antenna is moved from the source to a phase calibrator.

For this reason the electrical length of the cables is under permanent control. The LO2 signal is sent back to the central building in the High Q cable, and there it is mixed with the $\nu_{\mathrm{LO2}} + \epsilon_2$ signal from the synthesizer. The phasemeter measures every second the phase difference between the beat signal at 0.5 MHz and a reference 0.5 MHz signal.

The measured phase difference is twice the phase offset affecting the LO2, it is used by the computer to correct the LO1 phase φ_{LO1} after multiplication by $\nu_{\mathrm{LO1}}/\nu_{\mathrm{LO2}}$.

7.5 Next generation instruments

Next generation instruments will operate at higher frequencies, and need higher bandwidths, and better angular resolution. The major changes expected are:

- Use of optical fibers rather than cables. Actually this is already the case in some interferometers.
- Digitize higher in the signal chain. transporting digital signals require more bandwidth but is more accurate.
- Possibly generate LO signals using infrared lasers rather than by multiplying lower frequency signals.